#11 Special Topics

TA: Jerry Chen (jerry.c@berkeley.edu)

"The most disastrous thing that you can ever learn is your first programming language."

Alan Kay

Agenda

A special agenda for a special discussion

What we've learned so far in 61A

Special Topics — Beyond 61A

Final Thoughts

Time reserved for questions about my experience

What we learned in 61A

The tools to build programs

Abstractions

- Data abstractions (lists, trees, sequences)
- Behaviour (functions, methods)

Programming Paradigms

- Imperative + OOP (Python)
- Functional (Scheme)
- Declarative (SQL)

What comes next?

Problems in CS, and how to solve them

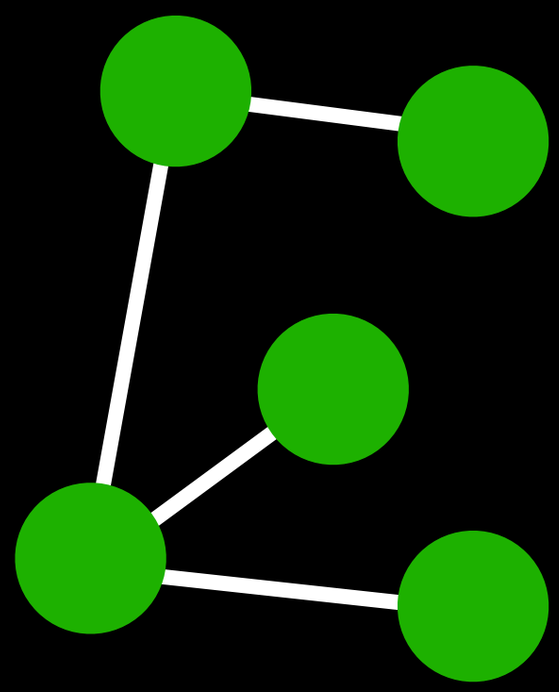

Delivering messages between computers

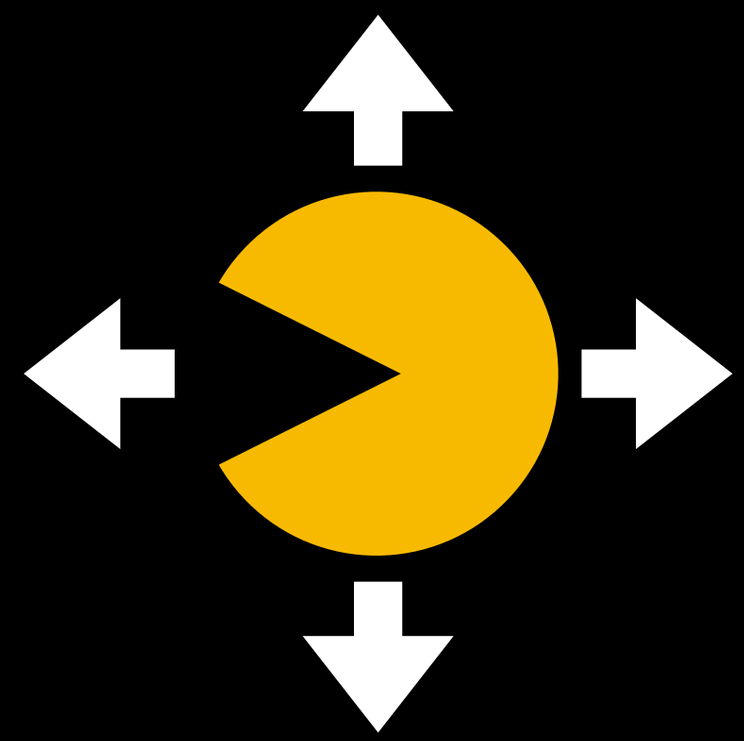

Picking the optimal moves in a game

The Internet

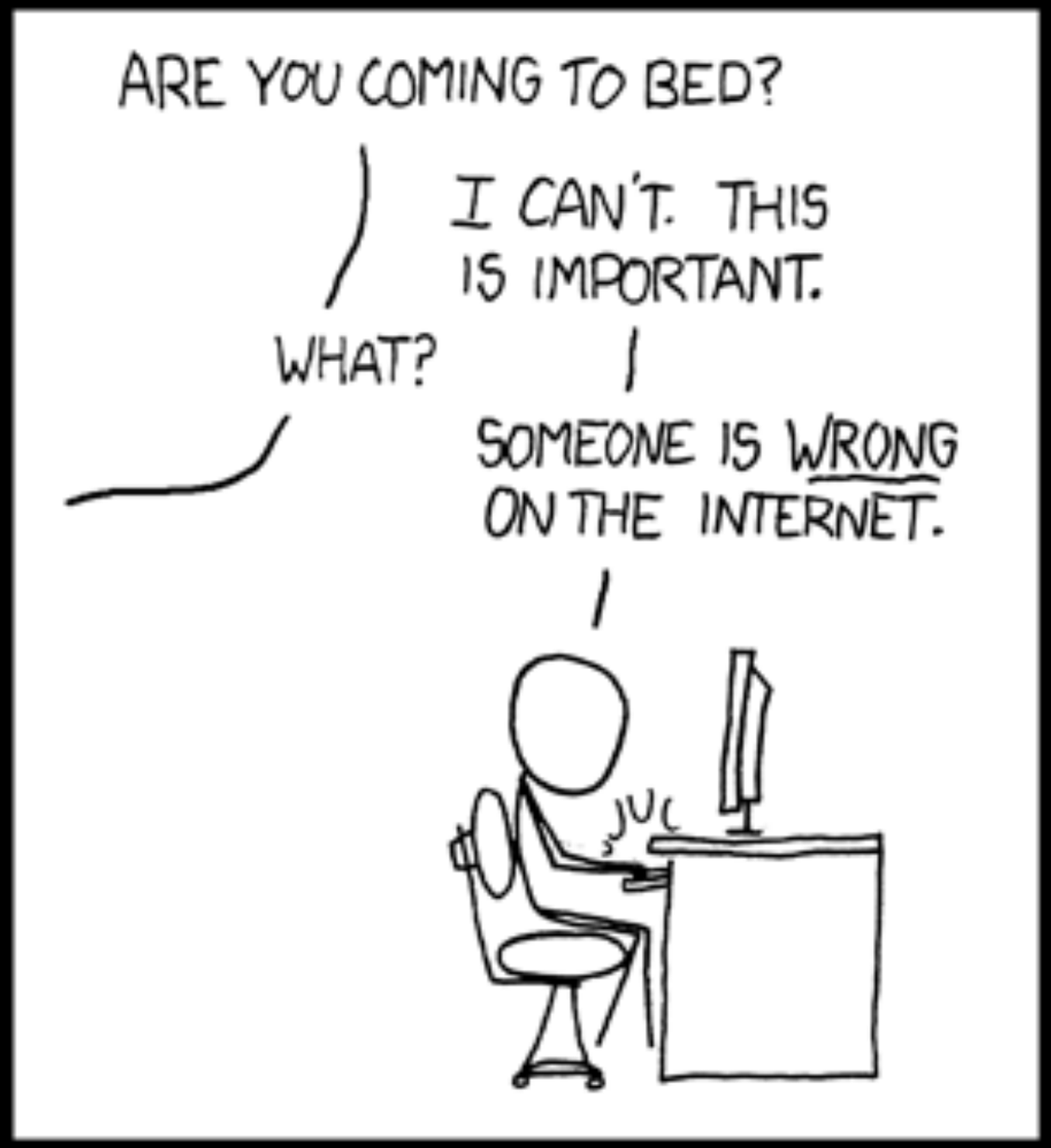

http://xkcd.com/386/

The Internet

Or actually… a small part of it

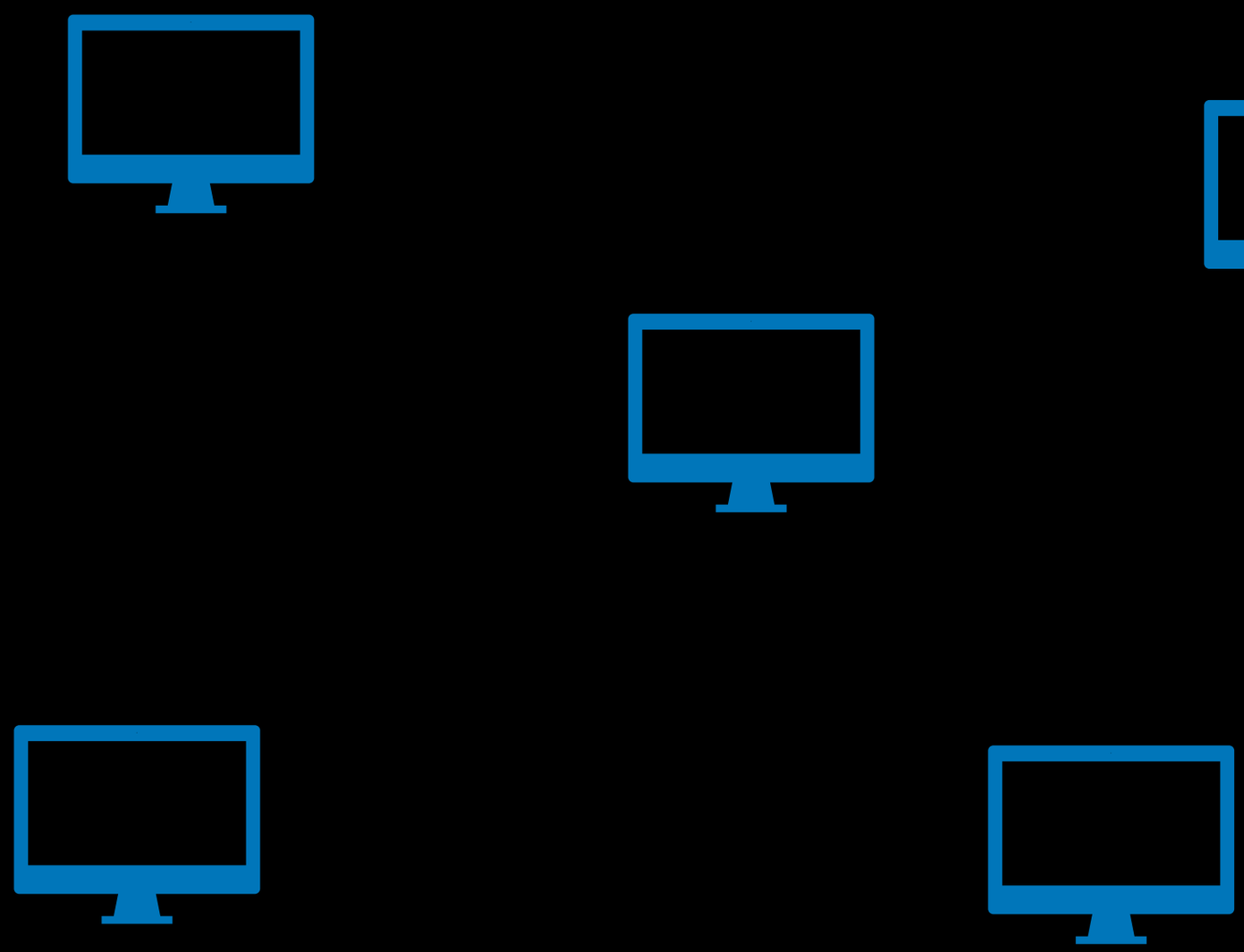

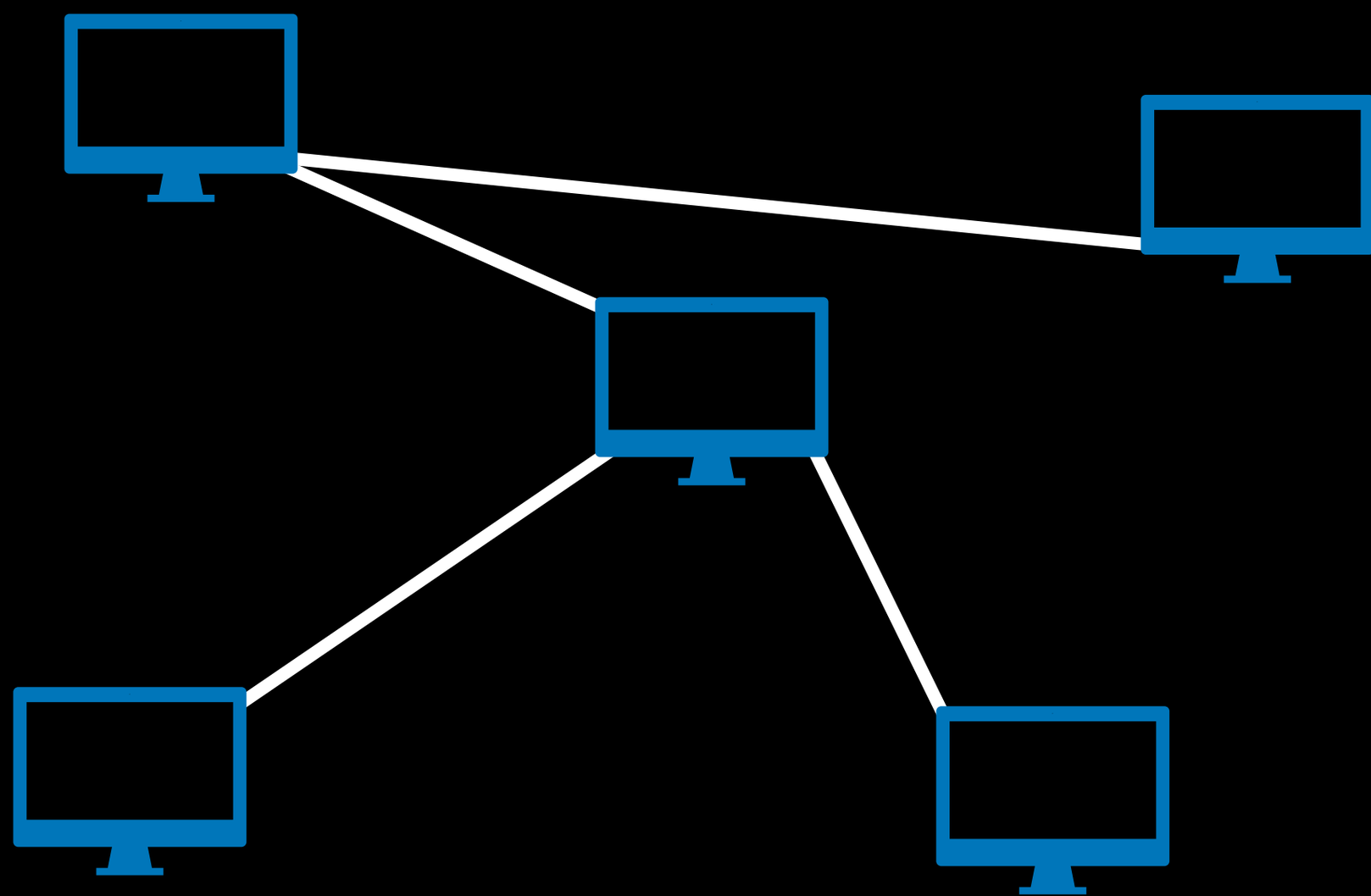

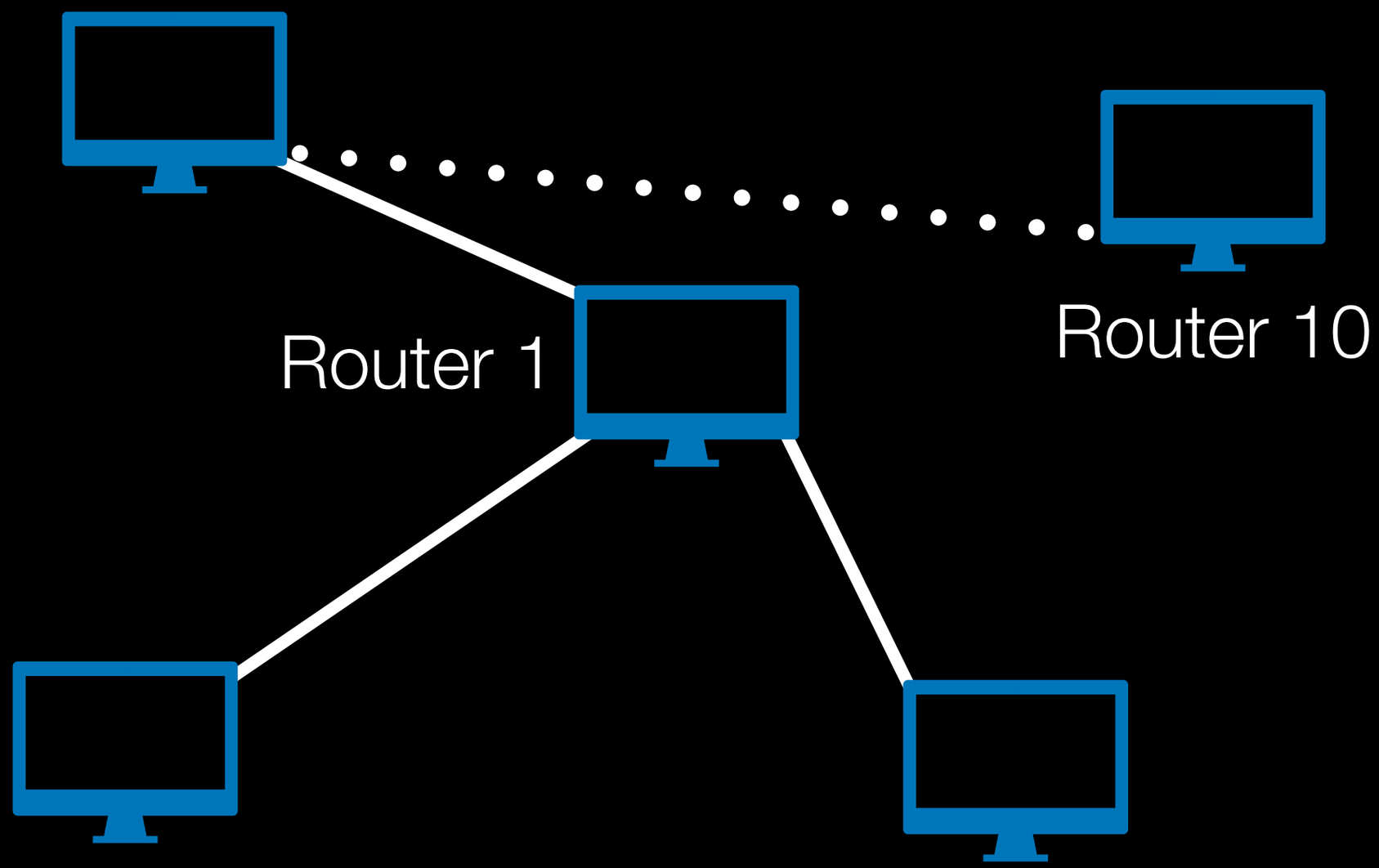
Router 1
Router 10

- Stay in your seats, don't show your slip to anyone else
- If you didn't get a slip of paper, sit back and enjoy (and maybe think of solutions)

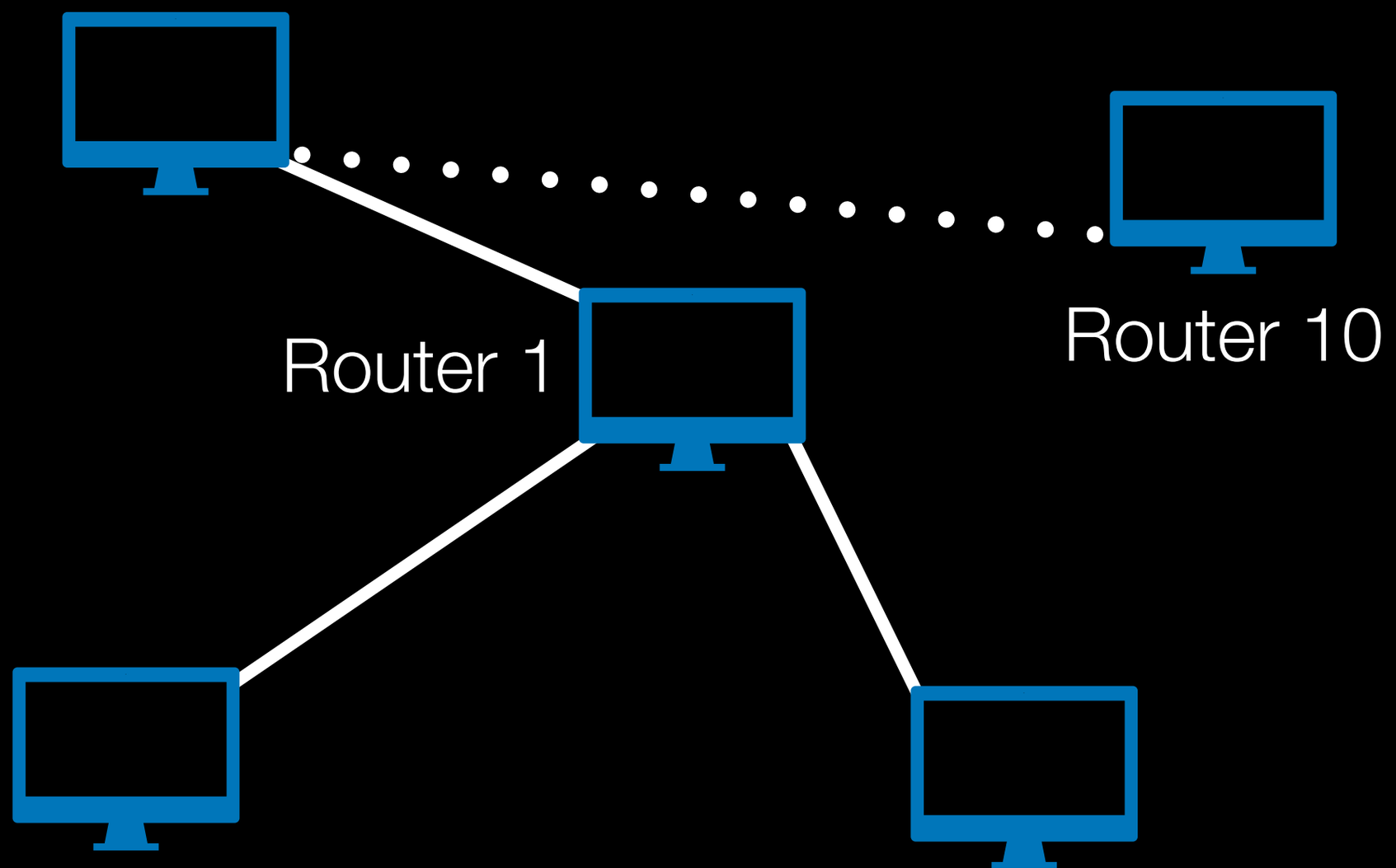

You **must remember** two things:

- Who called you
- Your distance to the destination

Approach goes something like this:

1. Destination stands up, distance 0. Calls neighbors.
2. If you are called and the distance is smaller, stand up, and call your neighbors
3. Repeat step 2 until source is reached.

Artificial Intelligence

Exploring Pacman

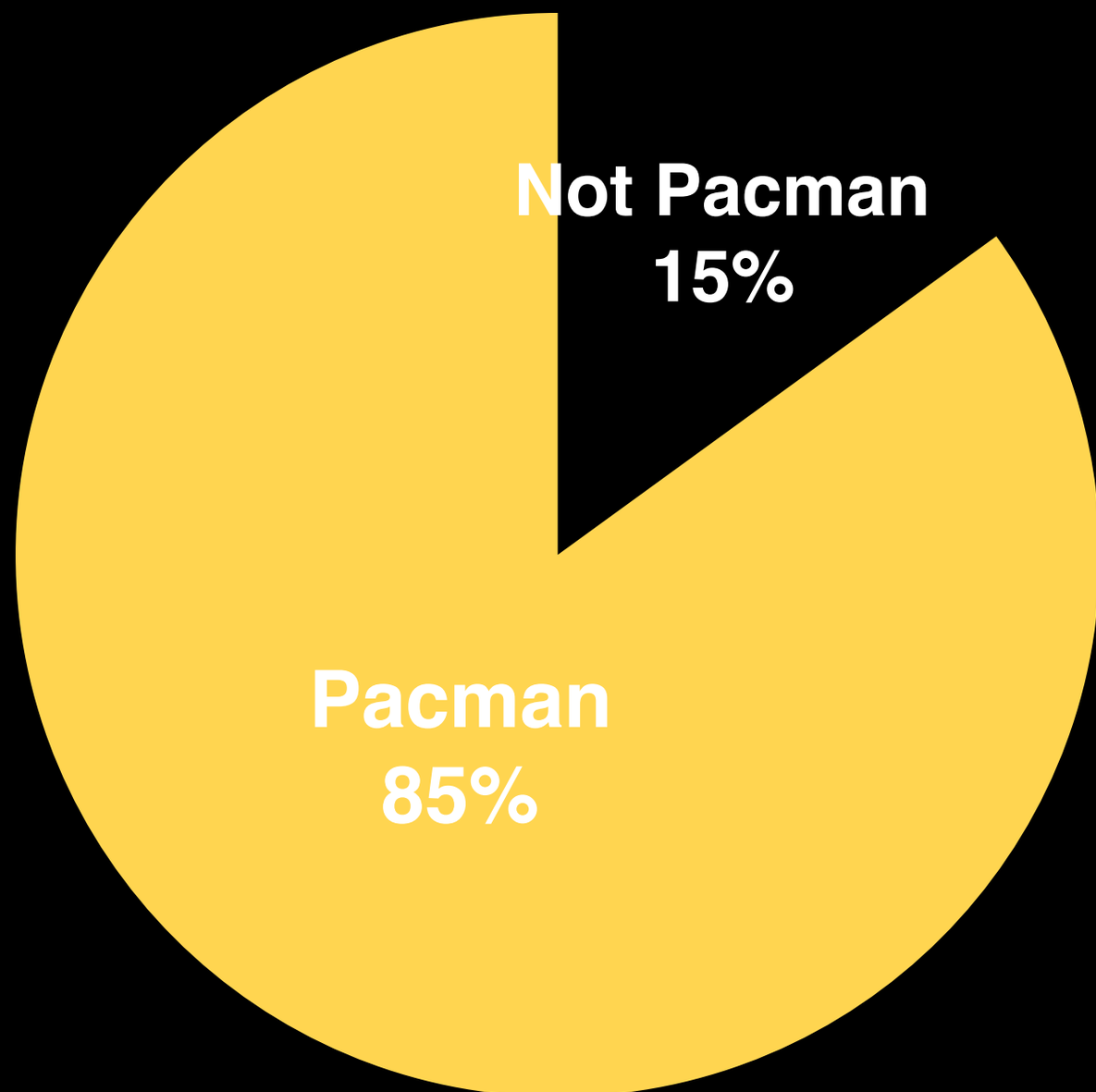

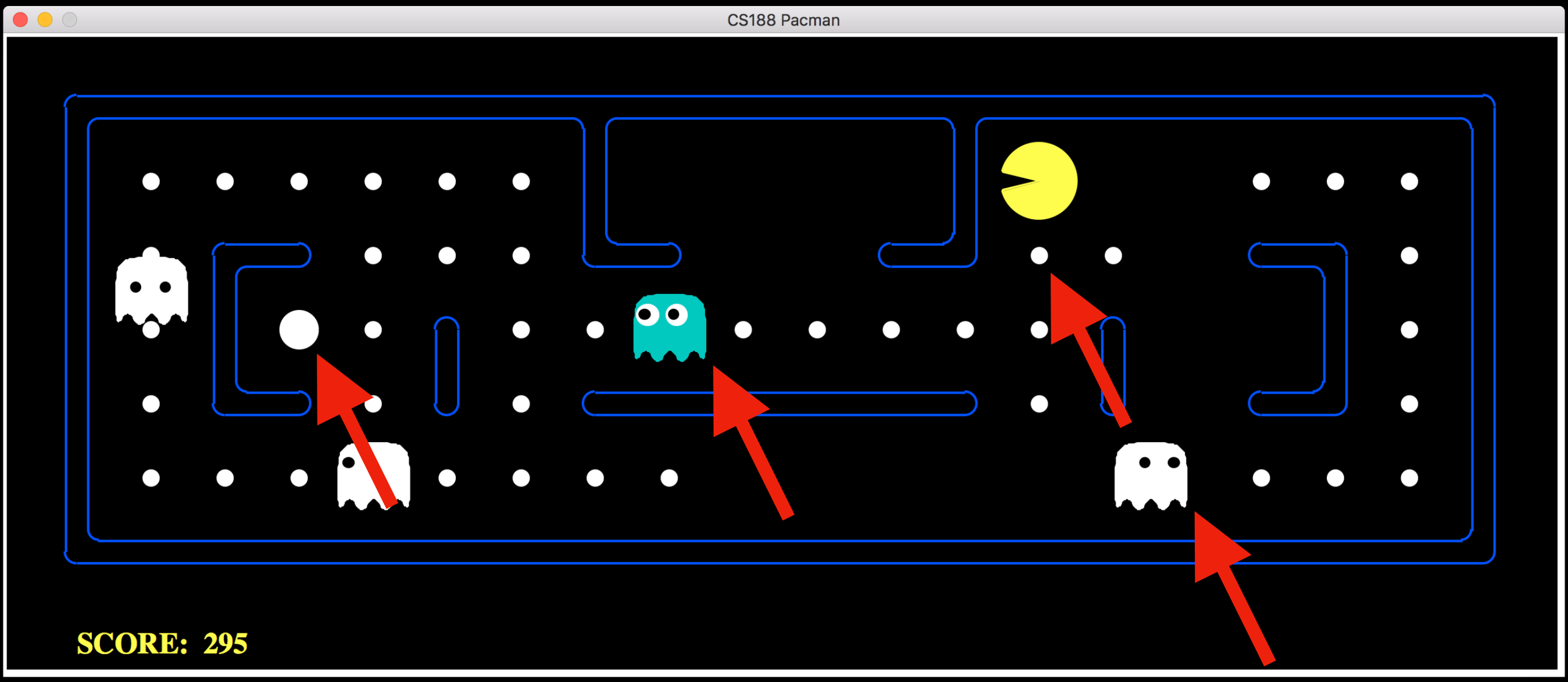
CS188 Pacman
SCORE: 295

Pacman AI

Reinforcement Learning (Q Learning)

- Observe **features**
- Use **weights** to determine how important they are
- Through trial and error, **learn** the weights

Features

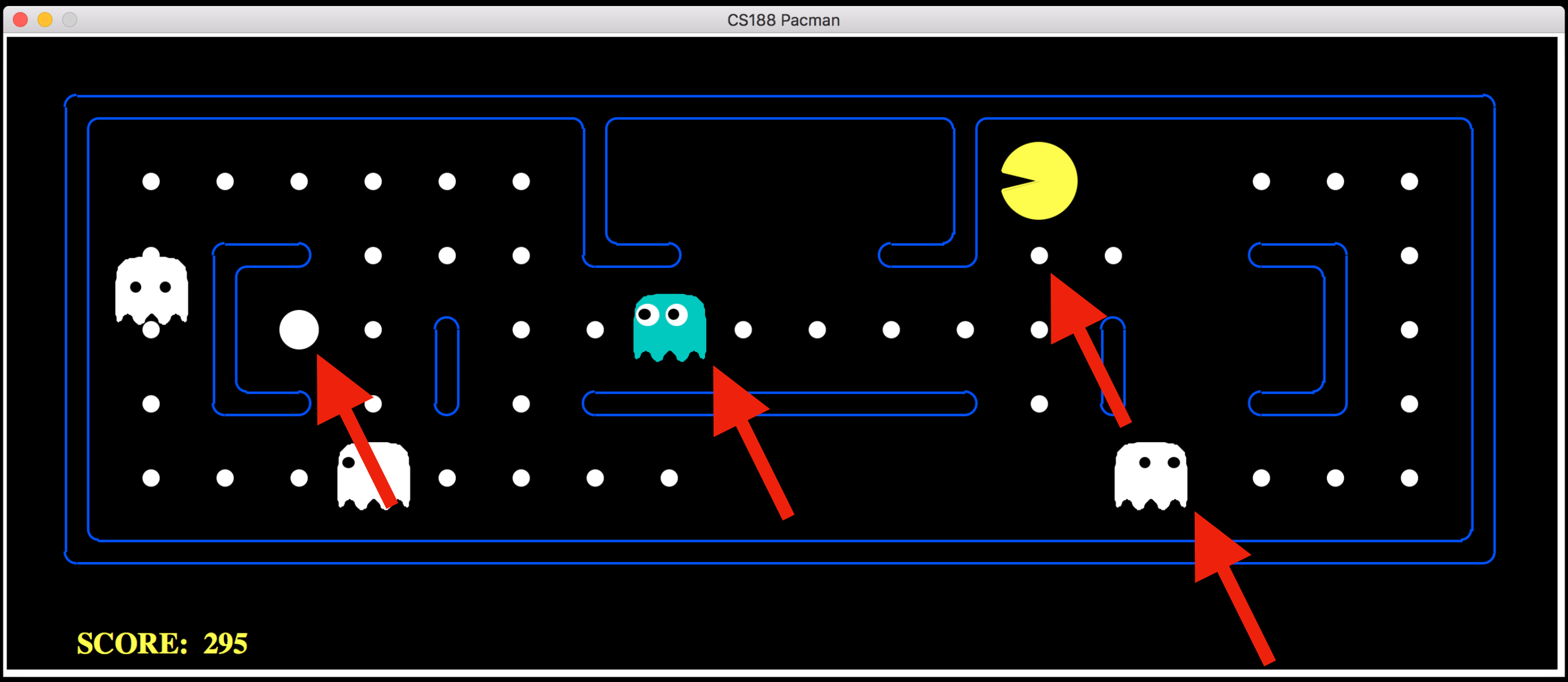

Pacman AI

Play!

Use the **<u>weights you learned</u>** to move(N/E/S/W/stay)

Pacman AI

Can we do better?

- Previously, I picked the features
- Why not learn the features **and** the weights?

Digit classification

A slightly different problem

Perceptron

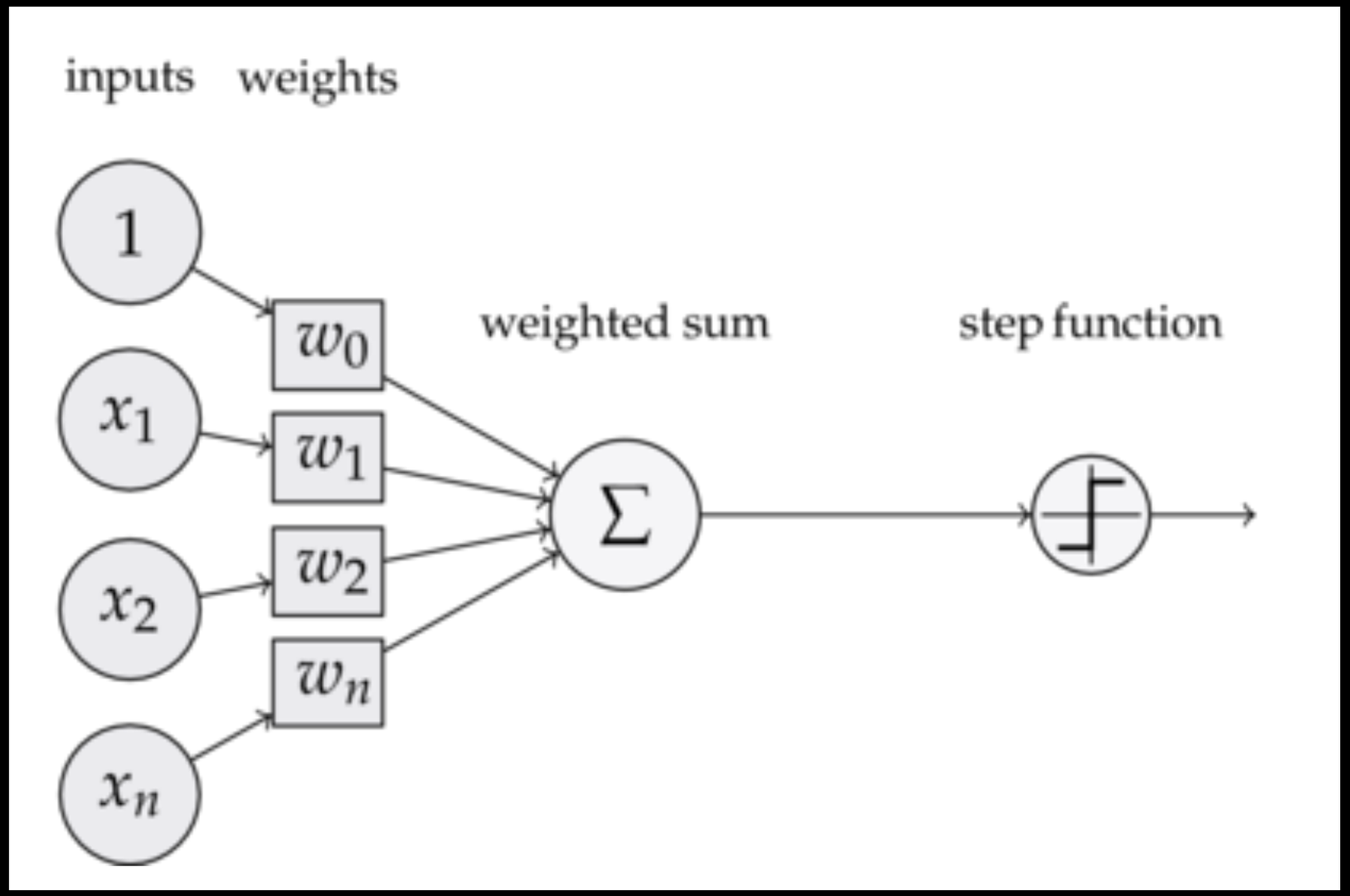
inputs
weights
1
x_1
x_2
x_n
w_0
w_1
w_2
w_n
weighted sum
Σ
step function

Neural Networks

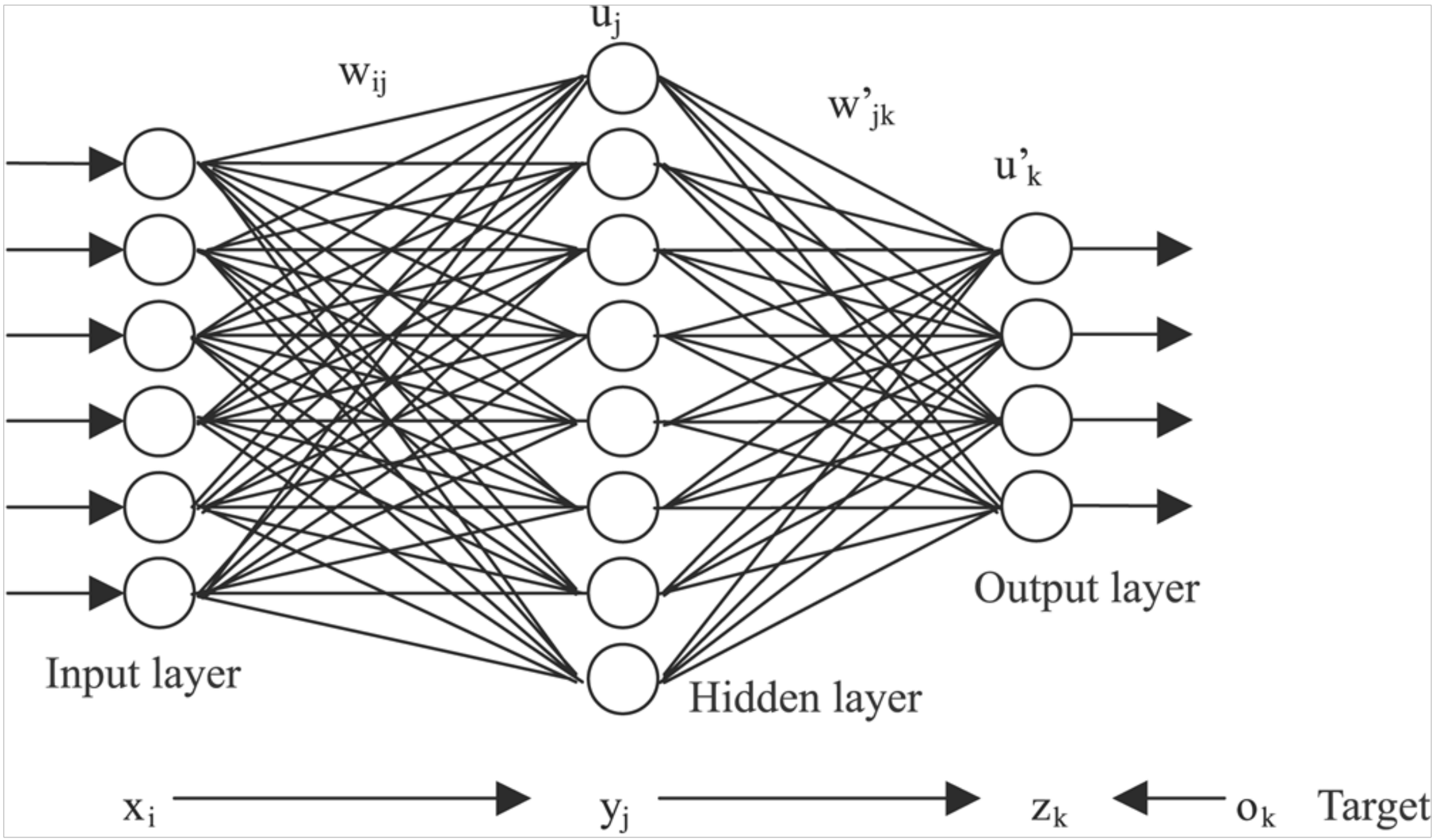

When Classification Goes Wrong

More than the eye can see

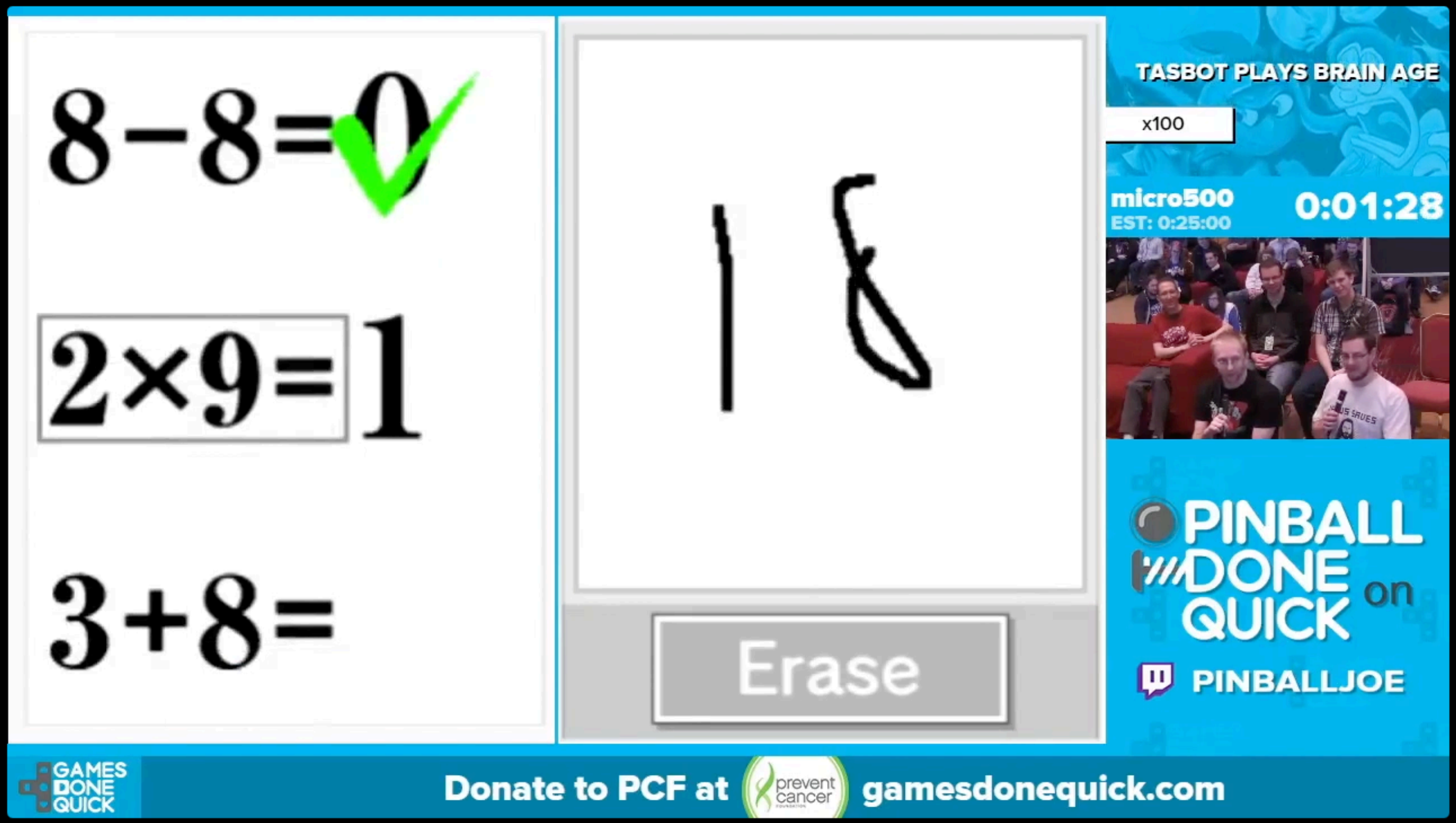

Another way to play Pacman

Using lexicographic ordering and time travel

More learning

Neural Networks

- http://playground.tensorflow.org/
- https://quickdraw.withgoogle.com

When classification goes wrong: https://youtu.be/mSFHKAvTGNk?t=16m48s

Learning to play other games: https://www.youtube.com/watch?v=xOCurBYI_gY (Pacman at 13:37)

Thoughts about CS

Care about the **code you write**

Care about the **tech you choose**

Care about the **impact you have**

Final thoughts

What to do during break?

The answer depends on how you're feeling…

"I'm bored! Isn't there homework to do or something?"

Option A

If this is you, you're in luck!

- **Make your own website:** http://jmcglone.com/guides/github-pages/
  My web page is built using Jekyll and it's open source
- **Learn how to use Vim,** the world's coolest (modal) editor, or just have fun: https://vim-adventures.com
- **Learn LaTeX,** a commonly used typesetting language, by using it to make your resume

"I'm bored! Isn't there homework to do or something?"

Option A

Even more options:

- **Learn how to use Git**, a popular version control system: http://try.github.io/
- **Learn some Java** to prepare for CS 61B: https://www.codecademy.com/learn/learn-java
- Tighten up your **development setup**: http://jerryjrchen.com/cs61a/setup/

"I think my head hurts now"

Option Get Me Outta Here

This one's easy:

- Read some books, preferably not textbooks
- Go watch Star Wars when it comes out

But actually relax! You don't need me to tell you how to do that

Final final thoughts

Thanks for a wonderful semester! If you liked 61A, why not stick around? 🎉

Final final thoughts

Please please please fill out course evaluations! Go to the last lecture, it'll be great

This is really important — **I don't have a middle name**

Feel free to contact me: jerry.c@berkeley.edu

Upper div CS Coursework I've Taken

Highlighted are the ones covered today

CS 188	**Artificial Intelligence**
CS 168	**Introduction to the Internet**
CS 161	Computer Security
CS 170	Algorithms
CS 162	Operating Systems
CS 164	Programming Langs & Compilers
CS 267	Parallel Computing

Where I've Worked

UC Berkeley EECS

- Lab assistant, Mentor for CSM, TA

Sandia National Labs

- Fun fact: "sandia" means watermelon in Spanish. I worked on satellites though

Optiver

- Fun fact: "Optiver" is a combination of the Dutch words for "options" and "trader

Apple

- Fun fact: All iPhone screenshots by Apple display 9:41 AM as the time